US008401700B2

(12) **United States Patent**
Ihrke et al.

(10) **Patent No.: US 8,401,700 B2**
(45) **Date of Patent: Mar. 19, 2013**

(54) **ACTUATOR AND ELECTRONICS PACKAGING FOR EXTRINSIC HUMANOID HAND**

(75) Inventors: **Chris A. Ihrke**, Hartland, MI (US); **Lyndon Bridgwater**, Houston, TX (US); **Myron A. Diftler**, Houston, TX (US); **David M. Reich**, Huntsville, AL (US); **Scott R. Askew**, Houston, TX (US)

(73) Assignees: **GM Global Technology Operations LLC**, Detroit, MI (US); **The United States of America as represented by the Administrator of the National Aeronautics and Space Administration**, Washington, DC (US)

(*) Notice: Subject to any disclaimer, the term of this patent is extended or adjusted under 35 U.S.C. 154(b) by 698 days.

(21) Appl. No.: **12/564,124**

(22) Filed: **Sep. 22, 2009**

(65) **Prior Publication Data**

US 2011/0071673 A1 Mar. 24, 2011

(51) **Int. Cl.**

G06F 19/00	(2006.01)
G05B 15/00	(2006.01)
B25J 17/00	(2006.01)
B25J 5/00	(2006.01)

(52) **U.S. Cl.** **700/245**; 700/258; 700/259; 700/264; 74/490.03; 74/490.06; 318/568.12; 901/1; 901/9; 901/15; 901/28; 901/29; 901/46; 901/47; 901/48; 901/49; 901/50

(58) **Field of Classification Search** 701/1, 36, 701/245; 74/490.03–490.06; 318/568.12; 700/245, 258, 259, 264; 901/1, 9, 15, 28, 901/29, 46–50

See application file for complete search history.

(56) **References Cited**

U.S. PATENT DOCUMENTS

4,246,661 A * 1/1981 Pinson 623/25
4,496,279 A * 1/1985 Langer 414/735

(Continued)

FOREIGN PATENT DOCUMENTS

JP 2002101695 A 4/2002
JP 2007021611 A 2/2007

(Continued)

OTHER PUBLICATIONS

http://robotics.nasa.gov/courses/fall2002/event/oct1/NASA_Robotics_20021001.htm.

Primary Examiner — James P. Trammell
Assistant Examiner — Majdi Alsomiri
(74) *Attorney, Agent, or Firm* — Quinn Law Group, PLLC

(57) **ABSTRACT**

The lower arm assembly for a humanoid robot includes an arm support having a first side and a second side, a plurality of wrist actuators mounted to the first side of the arm support, a plurality of finger actuators mounted to the second side of the arm support and a plurality of electronics also located on the first side of the arm support.

17 Claims, 5 Drawing Sheets

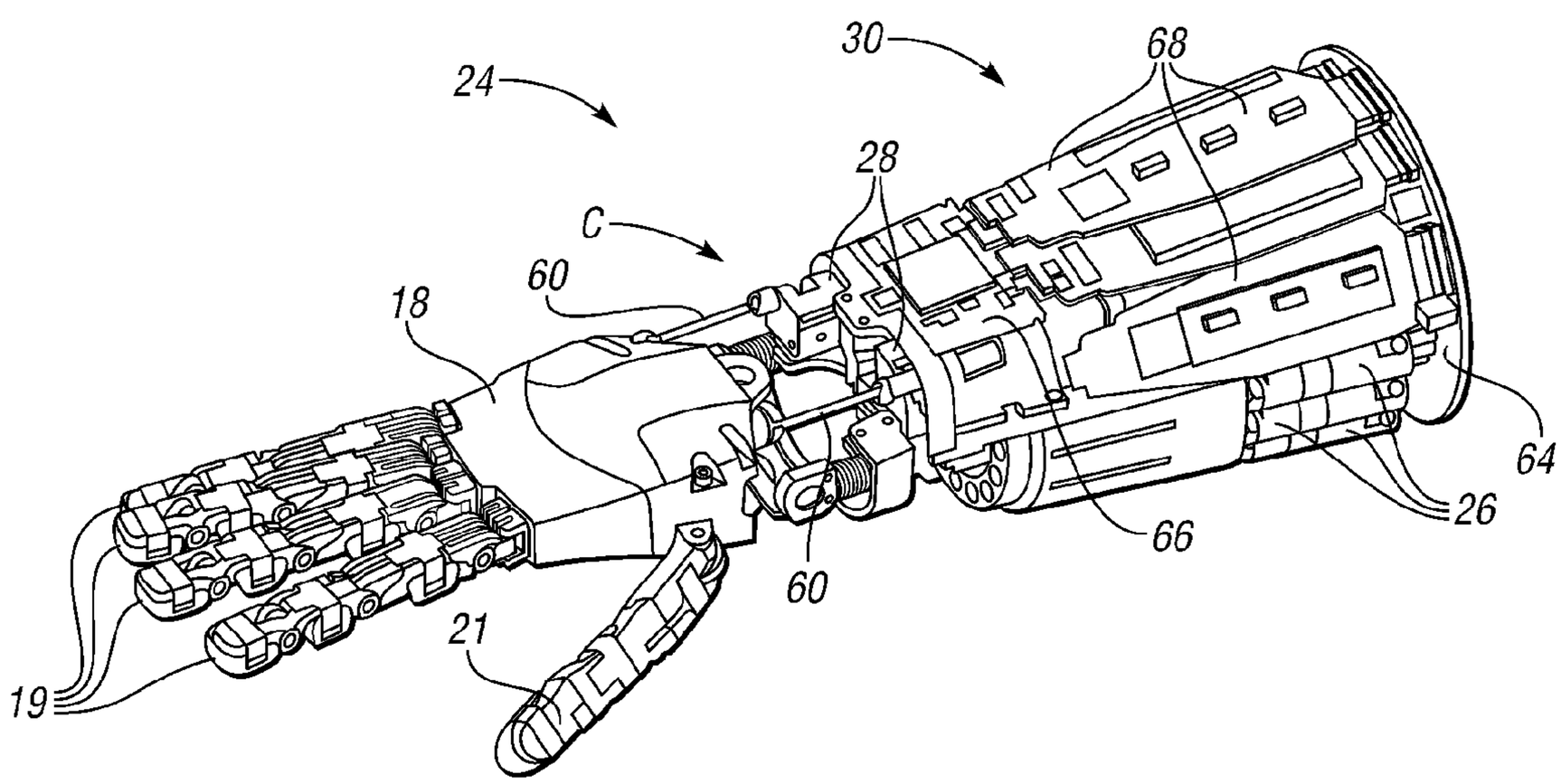

U.S. PATENT DOCUMENTS

4,729,253	A *	3/1988	Rosheim	74/490.06
4,834,761	A *	5/1989	Walters	623/26
4,921,293	A *	5/1990	Ruoff et al.	294/111
4,986,723	A *	1/1991	Maeda	414/729
5,355,743	A *	10/1994	Tesar	74/490.03
6,244,644	B1	6/2001	Lovchik et al.	
6,817,641	B1 *	11/2004	Singleton, Jr.	294/106
6,913,627	B2 *	7/2005	Matsuda	623/64
7,204,168	B2 *	4/2007	Najafi et al.	74/471 XY
7,222,904	B2 *	5/2007	Matsuda	294/111
2010/0011899	A1 *	1/2010	Kim et al.	74/490.04
2010/0259057	A1 *	10/2010	Madhani	294/106

FOREIGN PATENT DOCUMENTS

JP	2007221940	A	8/2007
JP	2009056515	A	3/2009

* cited by examiner

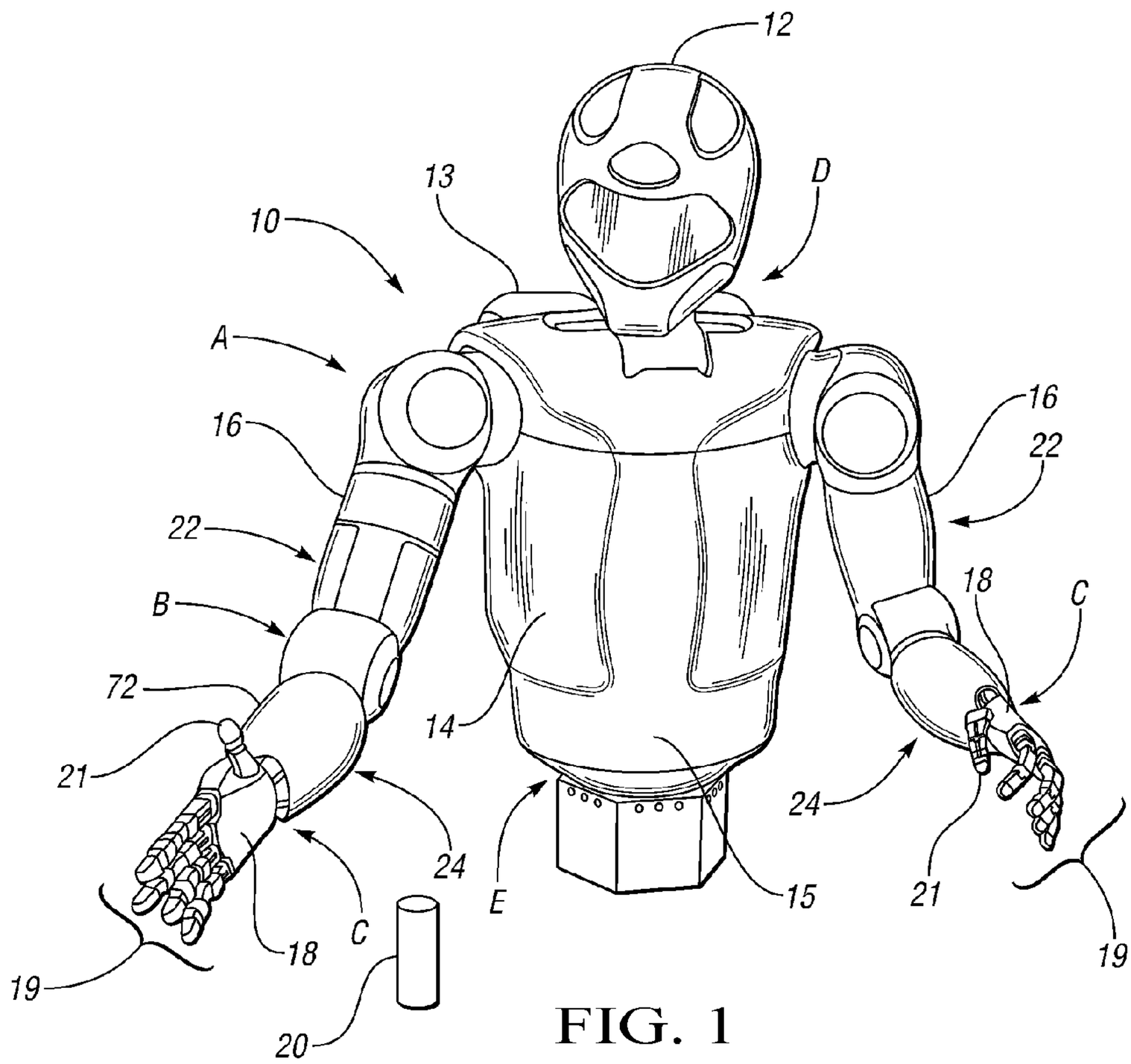
12
13
D
10
A
16
16
22
22
B
18
C
72
14
21
24
24
E
15
21
C
18
19
19
20

FIG. 1

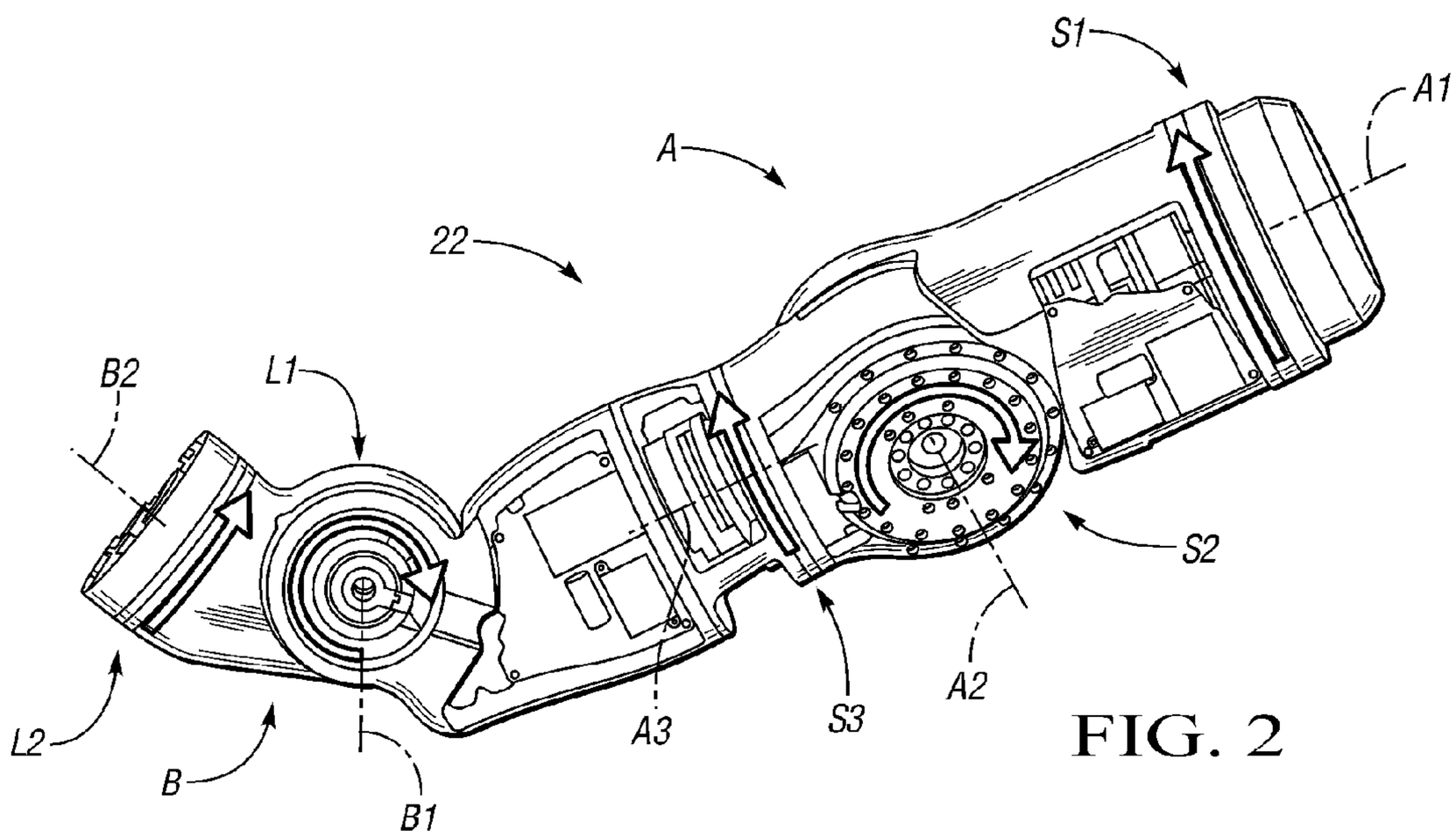
S1
A1
A
22
B2
L1
S2
A2
S3
A3
L2
B
B1

FIG. 2

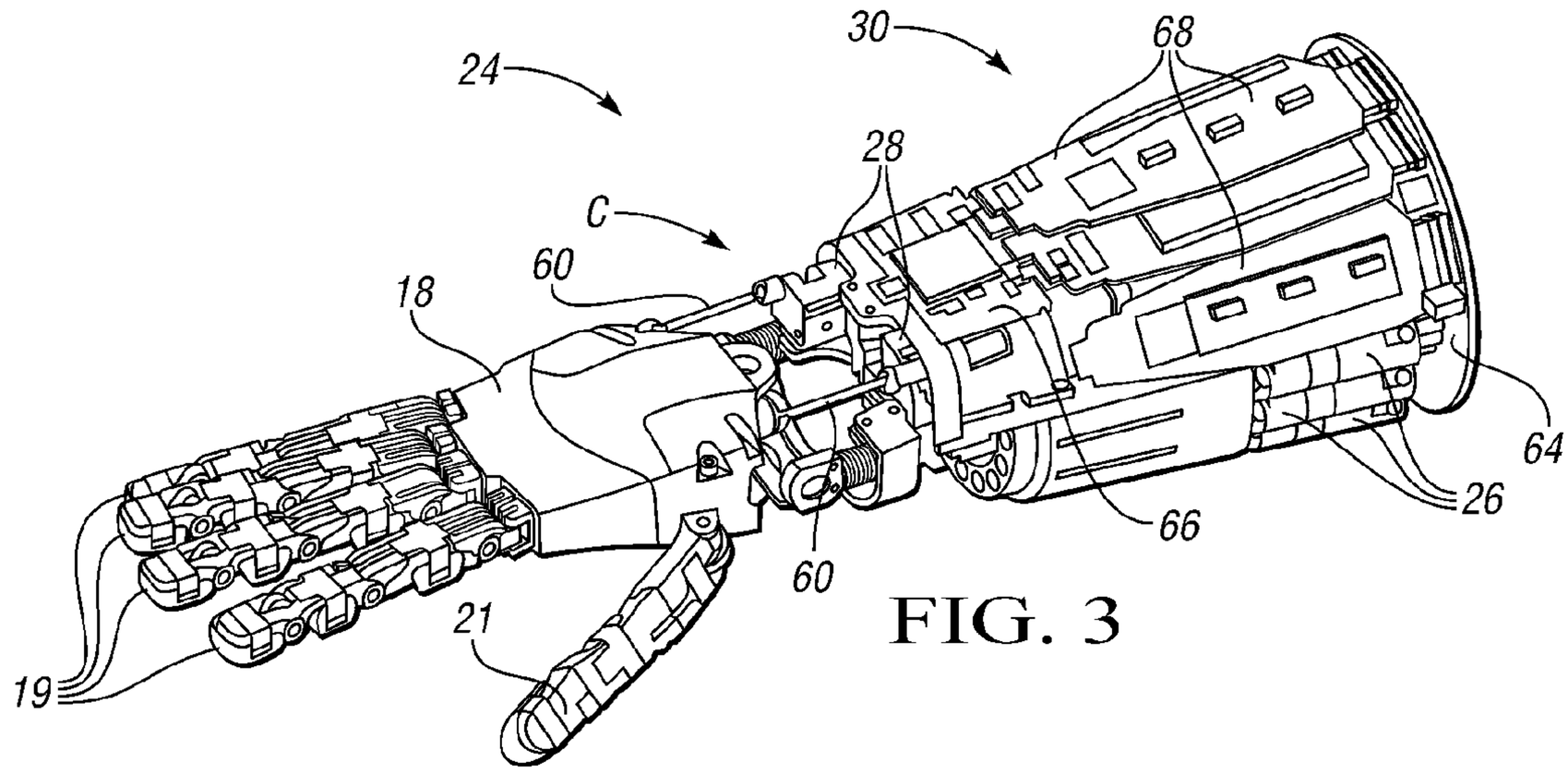

FIG. 3

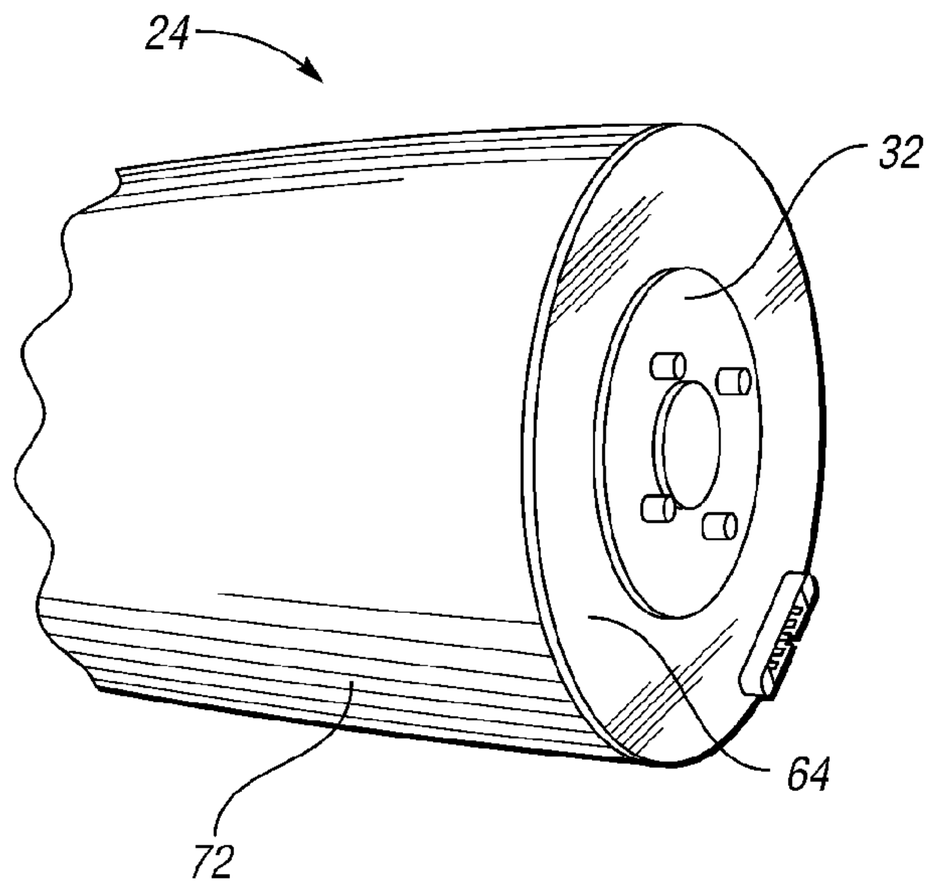

FIG. 3A

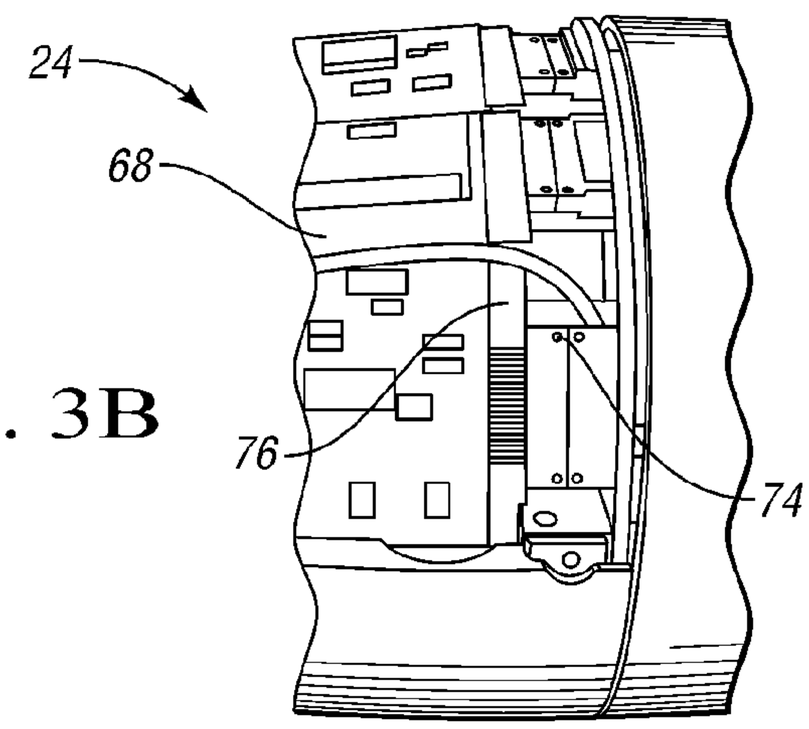

FIG. 3B

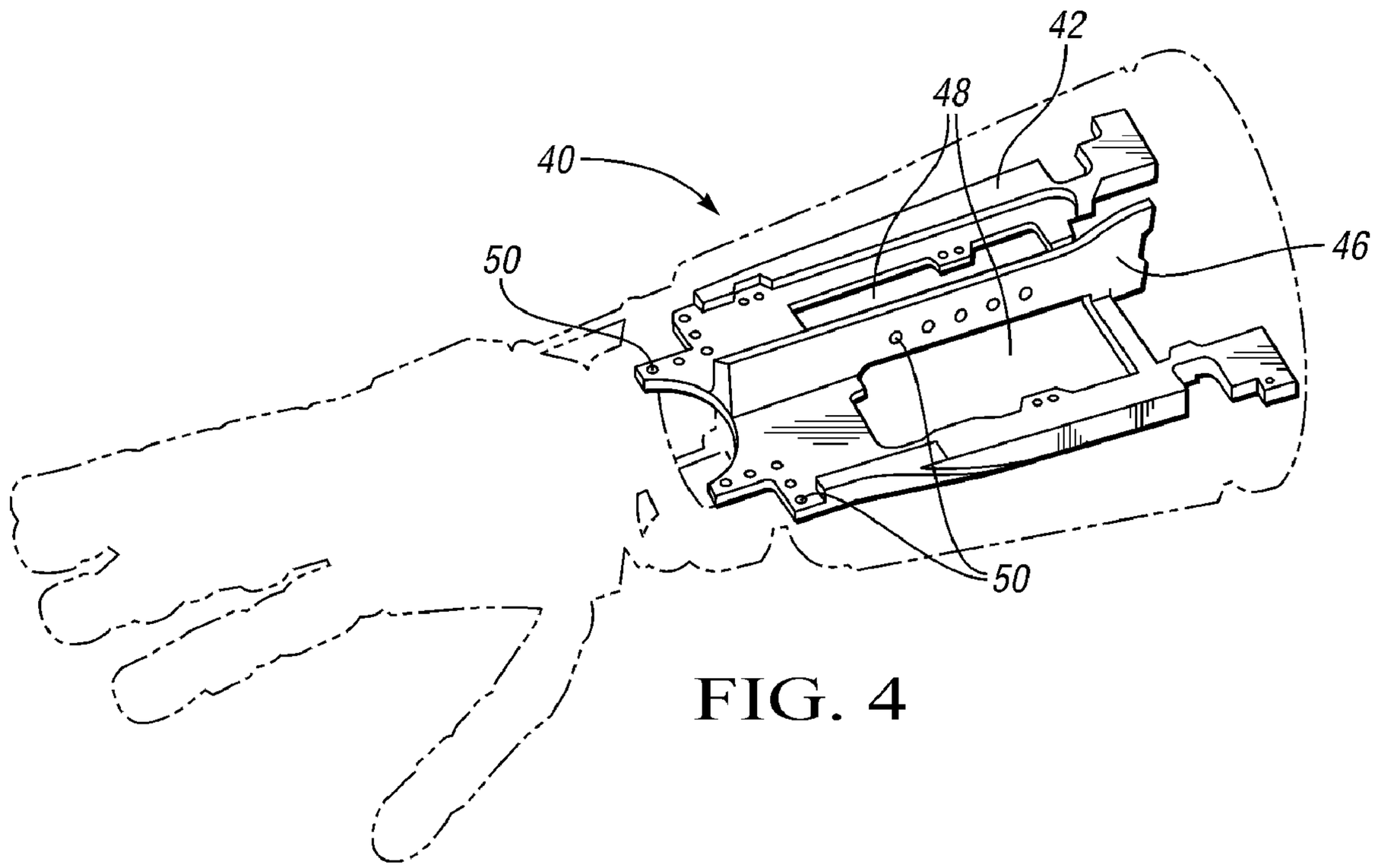

FIG. 4

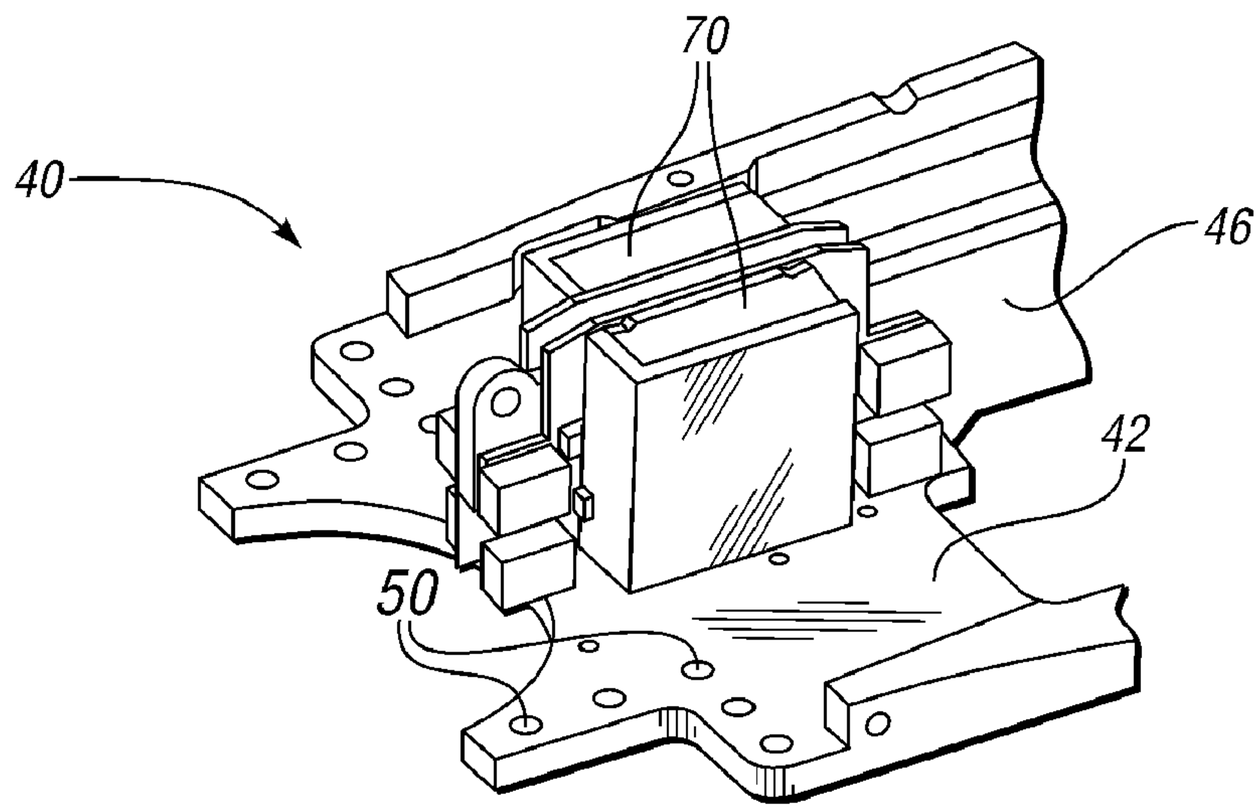

FIG. 4A

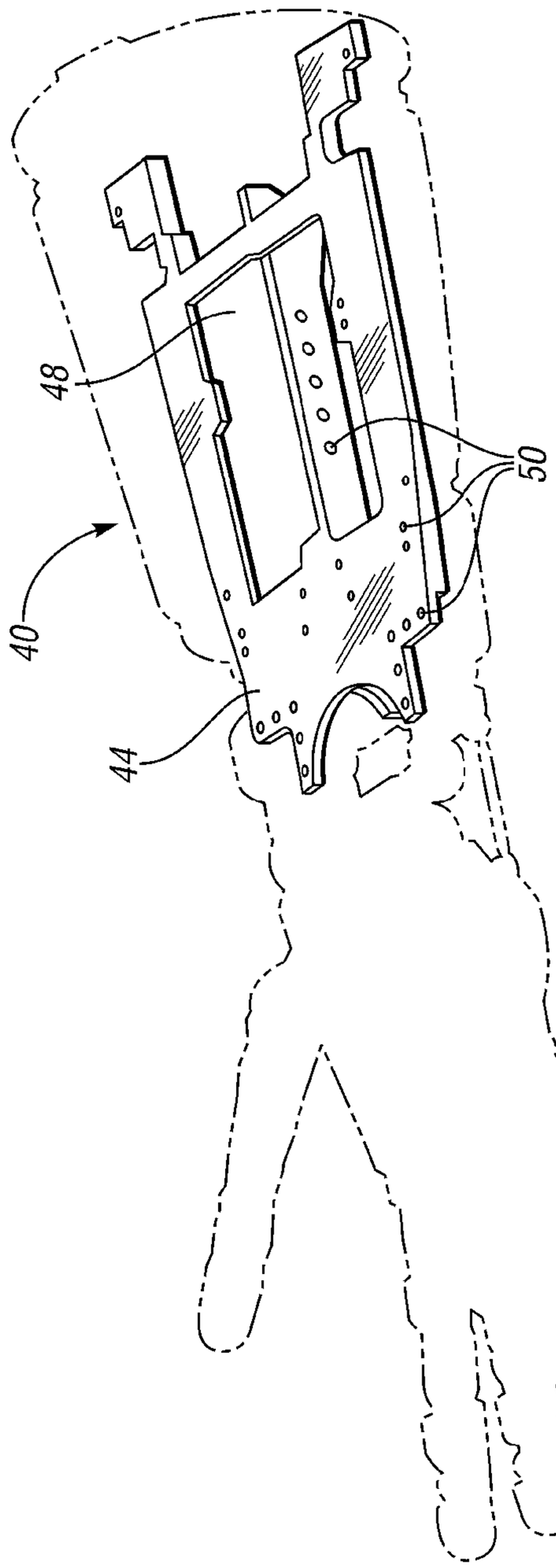

FIG. 5

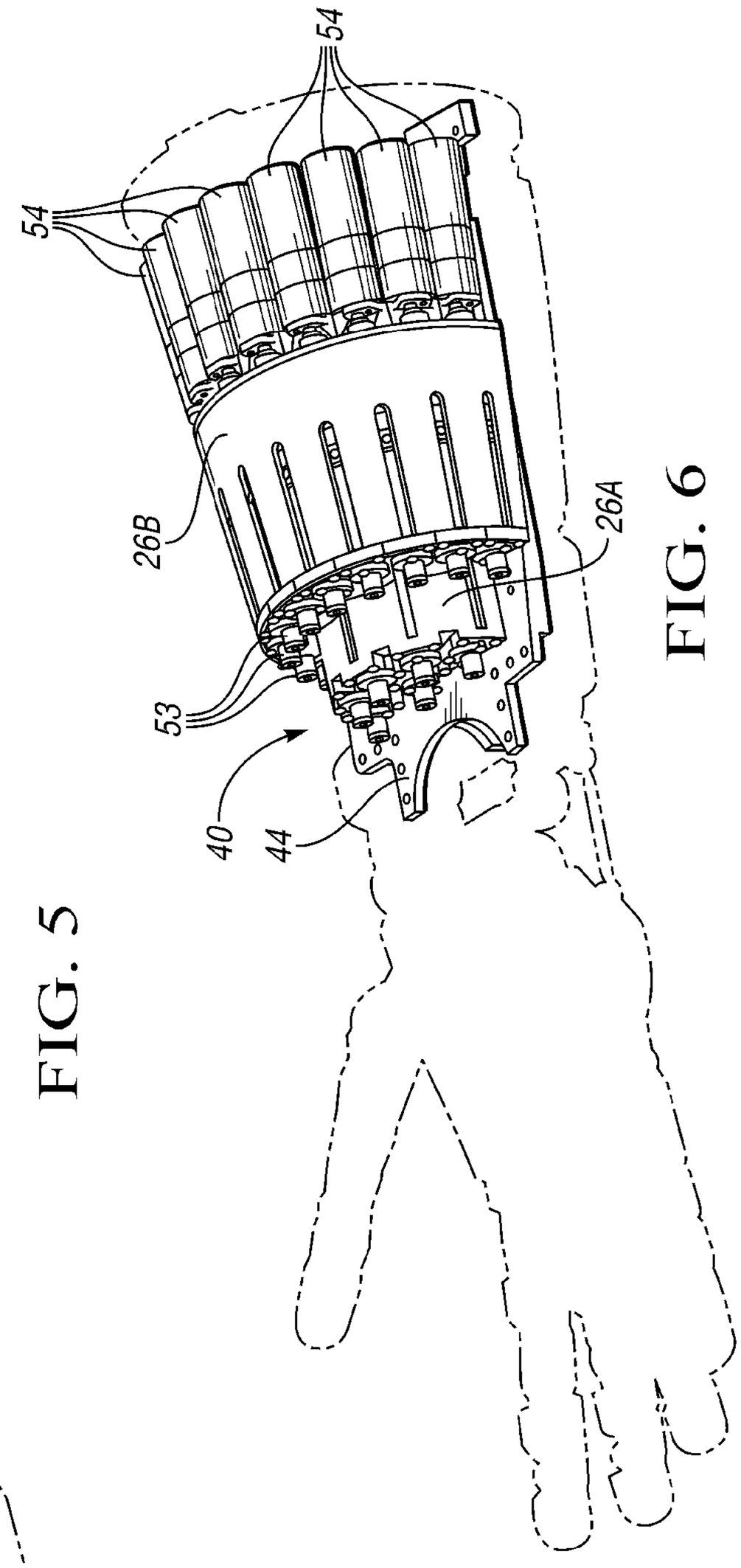

FIG. 6

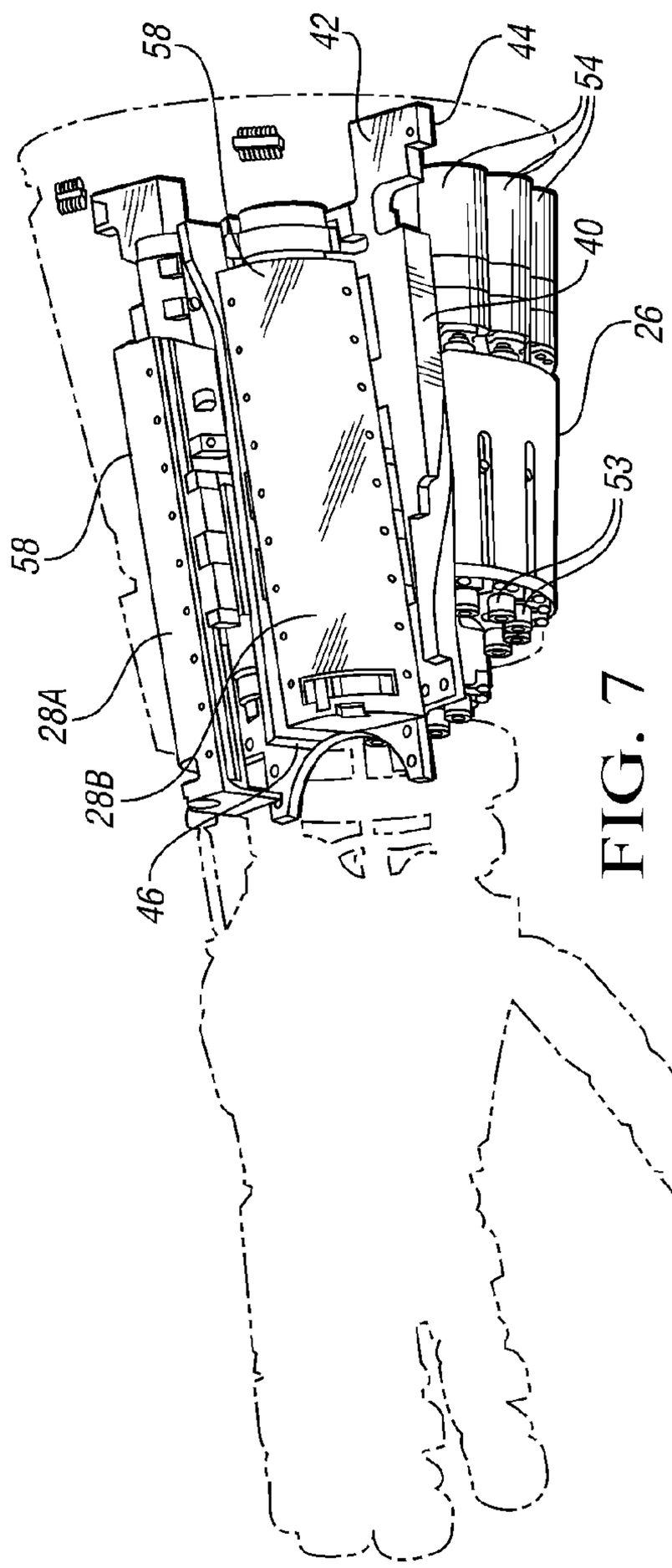

FIG. 7

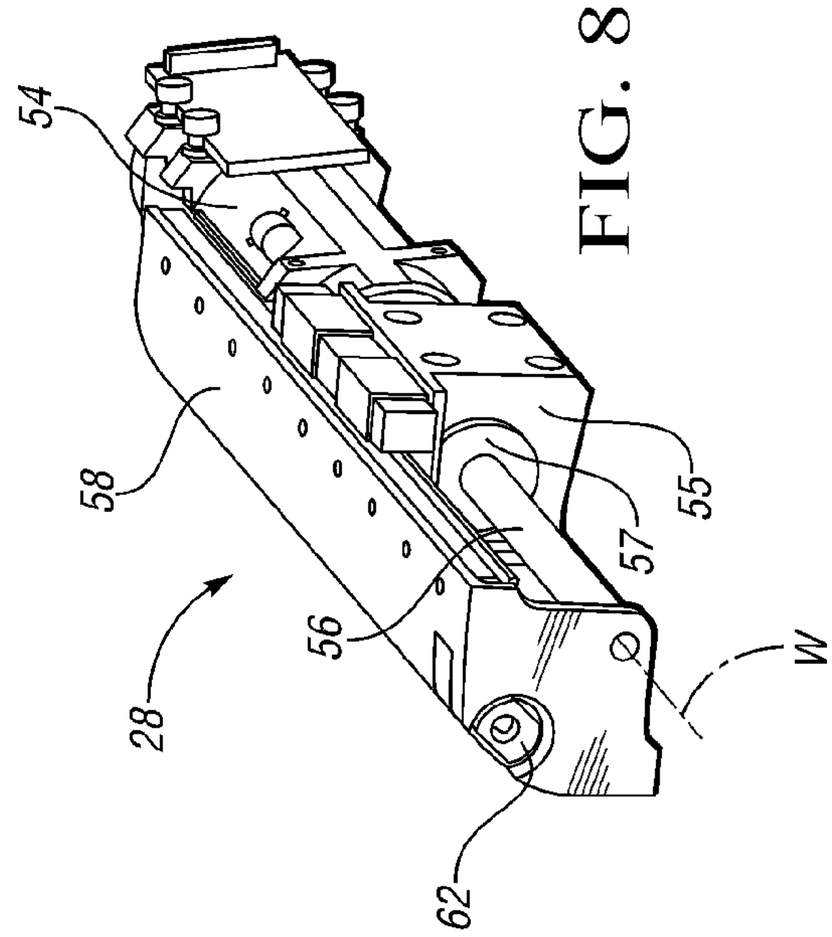

FIG. 8

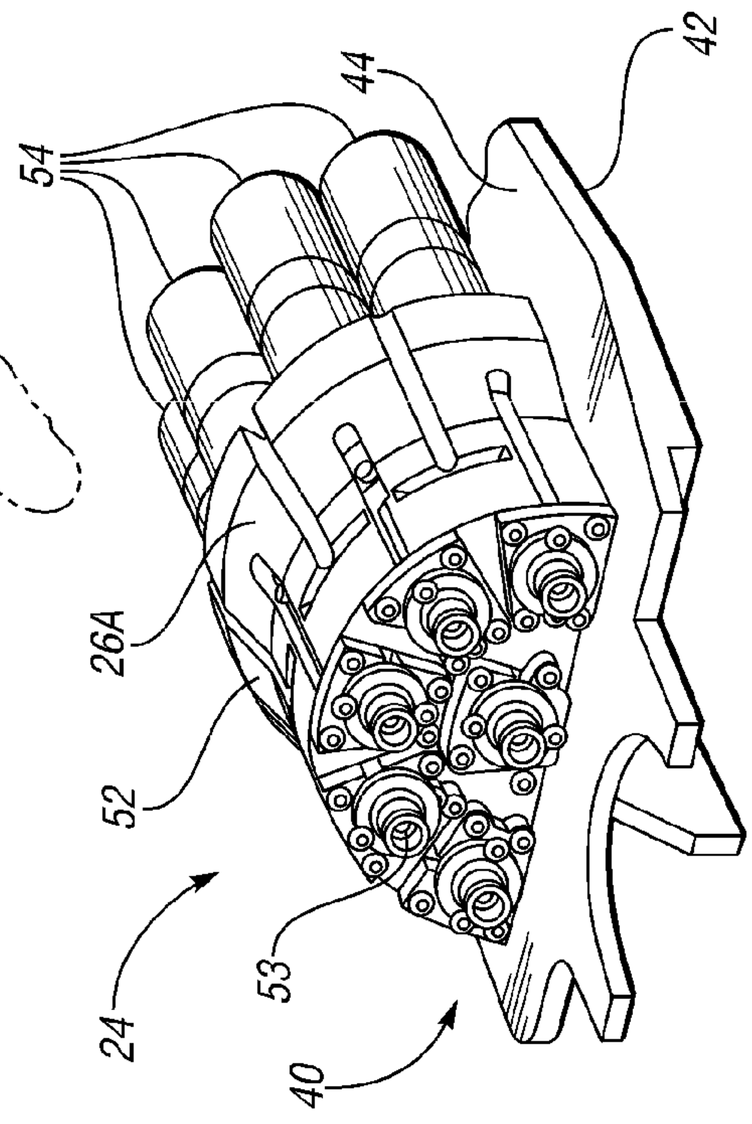

FIG. 6A

ACTUATOR AND ELECTRONICS PACKAGING FOR EXTRINSIC HUMANOID HAND

STATEMENT REGARDING FEDERALLY SPONSORED RESEARCH OR DEVELOPMENT

This invention was made with government support under NASA Space Act Agreement number SAA-AT-07-003. The government may have certain rights in the invention.

TECHNICAL FIELD

The present invention relates to a humanoid robot, and more specifically packaging for the actuation systems for a lower arm of the humanoid robot.

BACKGROUND OF THE INVENTION

Robots are automated devices that are able to manipulate objects using a series of rigid links, which in turn are interconnected via articulations or motor-driven robotic joints. Each joint in a typical robot represents an independent control variable, also referred to as a degree of freedom (DOF). End-effectors are the particular links used for performing a task at hand, e.g., grasping a work tool or an object. Therefore, precise motion control of a robot may be organized by the level of task specification: object level control, i.e., the ability to control the behavior of an object held in a single or cooperative grasp of a robot, end-effector control, and joint level control. Collectively, the various control levels cooperate to achieve the required robotic mobility, dexterity, and work task-related functionality.

Humanoid robots in particular are robots having an approximately human structure or appearance, whether a full body, a torso, and/or an appendage, with the structural complexity of the humanoid robot being largely dependent upon the nature of the work task being performed. The use of humanoid robots may be preferred where direct interaction is required with devices or systems that are specifically made for human use. Due to the wide spectrum of work tasks that may be expected of a humanoid robot, different control modes may be simultaneously required. For example, precise control must be applied within the different spaces noted above, as well control over the applied torque or force, motion, and the various grasp types.

In order to approximate human movement each joint within the robot requires at least one actuator for each DOF. Additionally, these actuators must be packaged in an arrangement that approximately represents human structure and appearance.

SUMMARY OF THE INVENTION

Accordingly, an arrangement is provided herein for packaging of a lower arm assembly for a dexterous humanoid robot. The lower arm assembly for the humanoid robot includes an arm support having a first side and a second side, a plurality of wrist actuators mounted to the first side of the arm support, a plurality of finger actuators mounted to the second side of the arm support, and a plurality of electronics also located on the first side of the arm support.

The plurality of finger actuators includes a first plurality of finger actuators and a second plurality of finger actuators mounted on the second side of the arm support. A support rib is located on the first side of the arm support. One wrist actuator is mounted on each side of the support rib.

The above features and advantages and other features and advantages of the present invention are readily apparent from the following detailed description of the best modes for carrying out the invention when taken in connection with the accompanying drawings.

BRIEF DESCRIPTION OF THE DRAWINGS

FIG. **1** is a schematic perspective illustration of a dexterous humanoid robot in accordance with the invention;

FIG. **2** is a schematic perspective illustration of an upper arm for the dexterous humanoid robot of FIG. **1**;

FIG. **3** is a schematic perspective illustration of a lower arm for the dexterous humanoid robot of FIGS. **1** and **2**;

FIG. **3**A is another schematic perspective illustration of the lower arm for the dexterous humanoid robot of FIG. **1-3**;

FIG. **3**B is an enlarged schematic perspective illustration of a portion of the lower arm for the dexterous humanoid robot of FIG. **1-3**A;

FIG. **4** is a schematic perspective illustration of a first side of a lower arm support for the dexterous humanoid robot of FIG. **1-3**B;

FIG. **4**A is an enlarged schematic perspective illustration of the first side of the lower arm support and a plurality of electronics for the dexterous humanoid robot of FIG. **1-4**;

FIG. **5**. is a schematic perspective illustration of a second side of the lower arm support for the dexterous humanoid robot of FIG. **1-4**;

FIG. **6** is a schematic perspective illustration of the second side of the lower arm support and a first plurality of finger actuators for the dexterous humanoid robot of FIG. **1-5**;

FIG. **6**A is a schematic perspective illustration of the second side of the lower arm support and a second plurality of finger actuators for the dexterous humanoid robot of FIG. **1-6**;

FIG. **7** is a schematic perspective illustration of the first side of the lower arm support and a plurality of wrist actuators and electronics for the dexterous humanoid robot of FIG. **1-6**B; and

FIG. **8**. is a schematic perspective illustration of one wrist actuator for the dexterous humanoid robot of FIG. **1-7**.

DESCRIPTION OF THE PREFERRED EMBODIMENT

With reference to the drawings, wherein like reference numbers refer to the same or similar components throughout the several views, FIG. **1** shows a dexterous humanoid robot **10** adapted to perform one or more tasks with multiple degrees of freedom (DOF).

The humanoid robot **10** may include a head **12**, torso **14**, waist **15**, arms **16**, hands **18**, fingers **19**, and thumbs **21**, with the various joints being disposed within or therebetween. The robot **10** may also include a task-suitable fixture or base (not shown) such as legs, treads, or another moveable or fixed base depending on the particular application or intended use of the robot. A power supply **13** may be integrally mounted to the robot **10**, e.g., a rechargeable battery pack carried or worn on the back of the torso **14** or another suitable energy supply, to provide sufficient electrical energy to the various joints for movement of the same.

According to one embodiment, the robot **10** is configured with a plurality of independently and interdependently-moveable robotic joints, such as but not limited to a shoulder joint assembly (arrow A), an elbow joint assembly (arrow B), a wrist joint assembly (arrow C), a neck joint assembly (arrow D), and a waist joint assembly (arrow E), as well as the

various finger joint assemblies (arrow F) positioned between the phalanges of each robotic finger **19**.

Each robotic joint may have one or more DOF. For example, certain joints such as the shoulder joint assembly (arrow A) and elbow joint assembly (arrow B) may have at least two DOF in the form of pitch and roll. Likewise, the neck joint assembly (arrow D) may have at least three DOF, while the waist and wrist assemblies (arrows E and C, respectively) may have one or more DOF. Depending on task complexity, the robot **10** may move with over 40 DOF. Although not shown in FIG. **1** for simplicity, each robotic joint contains and is driven by one or more actuators, e.g., joint motors, linear actuators, rotary actuators, and the like.

The arm **16** is divided into an upper arm **22** and a lower arm (or forearm) **24**. The upper arm **22** extends from the shoulder joint assembly (arrow A) to the elbow joint assembly (arrow B). Extending from the elbow joint (arrow B) is the lower arm **24**, hands **18**, fingers **19**, and thumbs **21**. For the purpose of simplification, as described herein, the upward direction is toward the head **12** and the downward direction is toward the waist **15**. Those skilled in the art will appreciate that since the robot **10** is intended to simulate a humanoid, the various extremities—e.g., the arms **16** including upper arms **22**, lower arms **24**, and hands **18**, etc.—will be symmetrical and essentially include an identical symmetrical skeletal structure on both the left and right sides. Therefore, when viewed frontally, as in FIG. **1**, the right arm **16** and right hand **18** will actually be on the left of the drawing.

Referring to FIG. **2**, the upper arm **22** is illustrated. Although only one upper arm **22** for the arms **16** is shown, both the left and the right arms **16** operate in the same manner as described below. The upper arm **22** has a shoulder joint assembly (arrow A) that includes a first shoulder joint S**1** providing a first DOF, and second shoulder joint S**2** providing a second DOF, and a third shoulder joint S**3** providing a third degree of freedom. Together the first through third shoulder joints S**1**, S**2**, S**3** perform the movements that represent the movements a human shoulder can perform. Specifically, rotation of the first shoulder joint S**1** about a first shoulder axis A**1** moves a second shoulder axis A**2** for the second shoulder joint S**2** into a desired position. Based upon the position of the first shoulder joint S**1**, rotation of the second shoulder joint S**2** about the second shoulder axis A**2** then moves the arm **16** up and down relative to the torso **14**, or forward and backward relative to the torso **14** or some combination thereof. The third shoulder joint S**3** rotates the upper arm **22** about a third shoulder axis A**3**. Rotation of the third shoulder joint S**3** rotates the upper arm **22** axially, i.e. rotation of the third shoulder joint S**3** rotates the elbow joint assembly (arrow B) to face upwards or downwards. Therefore, together the first shoulder joint S**1**, the second shoulder joint S**2**, and the third shoulder joint S**3** perform the motions of a shoulder joint assembly (arrow A).

The upper arm **22** also includes an elbow joint assembly (arrow B), which includes a first elbow joint L**1** and a second elbow joint L**2**. The first elbow joint L**1** and the second elbow joint L**2** each provide a degree of freedom. Together the first elbow joint L**1**, and the second elbow joint L**2** perform the movements that represent the movements of a human elbow can perform. Rotation of the first elbow joint L**1** about a first elbow axis B**1** causes the upper arm **22**, below the elbow joint assembly (arrow B) to bend and straighten. Additionally, rotation of the second elbow joint L**2** about a second elbow axis B**2** causes the upper arm **22**, below the elbow joint assembly (arrow B) to rotate axially, i.e. rotation of the second elbow joint L**2** about the second elbow axis B**2** rotates the lower arm **24** and hand **18** (FIG. **1**) to face palm up or down.

FIG. **3** illustrates the lower arm **24**, including the wrist joint assembly (arrow C), the hand **18**, the fingers **19**, and thumb **21**. The lower arm **24** includes a plurality of finger (and thumb) actuators **26** and a plurality of wrist actuators **28**. Additionally, a plurality of electronics **30** for the finger actuators **26** and the wrist actuators **28** are also supported on the lower arm **24**. The lower arm **24** is attached to a load cell **32** (shown in FIG. **3**A) which is used to connect the lower arm **24** with the upper arm **22**. The load cell **32** allows all loads experienced by the lower arm **24** to be monitored by electronics on the robot **10** which are remote from the lower arm **24**.

The finger actuators **26** include the actuators for the thumb **21**. Multiple finger actuators **26** may correspond to each finger **19** and the thumb **21**. In general, there must be one finger actuator **26** for each DOF available plus one additional finger actuator **26** for each finger **19** or thumb **21**. Therefore, each finger **19** having 3 DOF requires four finger actuators **26**, each finger **19** having two DOF requires three finger actuators **26**, and so on.

The hand **18** includes a thumb **21** having four DOF, two fingers **19** each having three DOF and two fingers **19** each having one DOF (the two fingers **19** each having one DOF share the required one extra finger actuator **26**). Additionally, the wrist joint assembly (arrow C) has two DOF. Therefore, the lower arm **22** provides fourteen DOF and requires sixteen finger actuators **26** and two wrist actuators **28**. By packaging the finger actuators **26**, wrist actuators **28** and the associated electronics **30** within the lower arm **22** this provides a self-contained actuation and control system for the lower arm **24**. The lower arm **24** assembly may be assembled as a module and mounted to suitable apparatus, such as the upper arm **22** for the humanoid robot **10**.

In the embodiment shown, the lower arm **24** has a hand **18** with a width of 3.6 inches and a length of 7.9 inches. The width of the hand **18** is approximately in the 60th percentile size for a human male hand and the length of the hand **18** is approximately in the 80th percentile for a human male hand. The wrist joint assembly (arrow C) is 3 inches in diameter. The length of the lower arm **24** to the wrist joint assembly (arrow C) is 9 inches with a maximum diameter of 5 inches and a diameter at the midpoint of 4 inches which is in the 80th percentile for a human male forearm. Therefore, the lower arm **24** is of approximate size and appearance as a human forearm.

FIGS. **4** and **5** illustrate schematic perspective views of a lower arm support **40** for the lower arm **24**. The lower arm support **40** is generally planar. FIG. **4** illustrates a first side **42** of the support **40**, or dorsal side, which faces upward when the hand **18** is facing palm down and FIG. **5** illustrates a second side **44** of the support **40**, or palmer side, which faces upwards when the hand **18** is facing palm up. The support **40** includes a support rib **46** protruding from the first side **42** down the center of the support **40**. The support **40** may define a plurality of openings **48** to allow access to components assembled on the support **40** and to reduce the weight of the support **40**. Additionally, the support **40** may define a plurality of attachment apertures **50** for attaching various lower arm **24** components to the support **40**, as described below.

FIGS. **6** and **6**A illustrate the second (palmer) side **44** of the support **40** which a first plurality of finger actuators **26**A and a second plurality of finger actuators **26**B mounted thereon. The first plurality of finger actuators **26**A are assembled within a common housing **52**. The housing **52** is mounted onto the second (palmer) side **44** of the support **40**. The housing **52** has a generally semi-circular shape with five of the finger actuators **26** packaged in a semi-circle within the housing **52** and one finger actuator **26** packaged at the center

of the semi-circle. The second plurality of finger actuators **26**B includes an additional ten finger actuators **26**. The second plurality of finger actuators **26**B are individually housed. The second plurality of finger actuators **26**B are individually mounted onto the support **40**. For additional strength, support arches (not shown) may be positioned over the first plurality of finger actuators **26**A and secured to the support **40**. The second plurality of fingers actuators **26**B may then be secured to the support arches. The first plurality of finger actuators **26**A and the second plurality of finger actuators **26**B form a generally semi-circular shape to form the second (palmer) side **44** of the lower arm **24**.

Each of the individually housed finger actuators **26** has a housing with a generally trapezoidal cross-section shape to aid in packaging the finger actuators **26** into the generally semi-circular and arched arrangement of the second plurality of finger actuators **26**B. Additionally, each of the finger actuators **26** includes a motor **54** secured to one end and a tendon (not shown) attached to the other end **53**. The actuators **26** taper inward from the motor **54** to the tendon end **53** of the finger actuator **26**. Once assembled the finger actuators **26** create a tapered appearance similar to a human forearm.

FIG. **7** illustrates the first side (dorsal) **42** of the lower arm **24**. A first wrist actuator **28**A and a second wrist actuator **28**B are mounted on the first side **42** of the support **40**. The first and second wrist actuators **28**A and **28**B are mounted in mirrored relation to one another on opposing sides of the support rib **46**.

FIG. **8** illustrates a perspective schematic view of a wrist actuator **28**. The wrist actuators **28** each have a slider support **55** which is secured to the first (dorsal) side **42** of the support **40** (shown in FIG. **7**). A motor **54** rotates a ball nut **57**. The ball nut has a threaded engagement with a ball screw **56**, which is connected to a wrist actuator slider **58**. The ball nut **57** is rotated by the motor **54** whereas the ball screw **56** is kept from rotating by its connection to the wrist actuator slider **58**. The ball screw **56** defines a wrist actuator axis W. As the motor **54** rotates the ball nut **57**, the ball screw **56** is translated along a wrist actuator axis W. The axial movement of the ball screw **56** moves the wrist actuator slider **58**. A wrist link **60** (shown in FIG. **3**) is attached to the slider **58** at a link attachment **62**. The wrist link **60** extends from the actuator slider **58** and is attached to the wrist joint assembly (arrow C). As the wrist actuator slider **58** is translated relative to the support **40** the wrist link **60** is also translated to actuate movement of the wrist joint assembly (arrow C).

Referring back to FIGS. **3**-**3**B and **4**A a plurality of electronics **30** are secured to the support **40**. In the embodiment shown, the electronics **30** include a ring board **64**, a lower arm controller **66**, a plurality of motor drivers **68**, and a plurality of DC power regulators **70**.

The ring board **64** is mounted to the support **40** and concentrically arranged about the load cell **32**. The ring board **64** and the load cell **32** have a generally planar arrangement that will allow for necessary wiring while providing for compact packaging of the lower arm **22** to the upper arm **24**. The ring board **64** provides the connection circuitry between the finger actuators **26**, wrist actuators **28**, motor drivers **68**, lower arm controller **66**, and DC power regulators **70**. Additionally, the ring board **64** provides the electrical interface to the remaining portion of the robot **10** in that it accepts motor power, processor power and data communication from the robot **10**.

The lower arm controller **66** distributes the motor commands to the motor drivers **68**. The motor commands are originated from other controllers associated with the robot **10** and upstream of the lower arm **24**.

The motor drivers **68** each perform commutation for the motors **54** in the finger actuators **26** and the wrist actuators **28**. The motor drivers **68** each communicate with at least three of the motors **54** for the finger actuators **26** and the wrist actuators **28**. There are a total of six motor drivers **68** for controlling all of the finger actuators **26** and the wrist actuators **28** in the lower arm **22**. All the required motor drivers **68** are packaged on the lower arm **24**. The motor drivers **68** each have a generally trapezoidal shape to allow for tapering of the lower arm **24**. The motor drivers **68** are arranged in a generally perpendicular relationship to the ring board **64**. Thus, the motor drivers **68** each include a flexible circuit board portion **76** to accommodate the arrangement. The flexible circuit board portion **76** allows the motor drivers **68** to taper inward as they get closer to the wrist, following the generally tapered overall shape of the lower arm **24**.

In order to facilitate insertion and extraction of the motor drivers **68**, each motor driver **68** includes insertion apertures **74**. The insertion apertures **74** are designed for use with common retainer ring pliers. The retainer ring pliers will fit within the insertion apertures **74** to facilitate either insertion or extraction of the motor drivers **68** while preventing damage to the flexible portions **72**.

The DC power regulators **70** are mounted on opposing sides of the support rib **46** and provide voltage controlled power to the lower arm controller **66** and to other devices located within the hand **18**. The DC power regulators **70** are located between the support rib **46** and the wrist actuators **48**. By mounting the power regulators **70** directly to the support rib **46**, the support **40** can act as a heat-sink to dissipate the heat generated by the voltage regulators **70**.

A lower arm housing **72** (shown in FIG. **1**) is mounted to the exterior of the lower arm **22** around the finger actuators **26**, wrist actuators **28** and electronics **30**. The lower arm housing **72** has a generally circular shape which tapers from the elbow joint assembly (arrow B) to the wrist joint assembly (arrow C). Therefore, the lower arm **24** has a similar appearance to a human forearm.

While the best modes for carrying out the invention have been described in detail, those familiar with the art to which this invention relates will recognize various alternative designs and embodiments for practicing the invention within the scope of the appended claims

The invention claimed is:

1. A lower arm assembly for a humanoid robot comprising:

an arm support having a first side and a second side;

a plurality of wrist actuators mounted to the first side of the arm support;

a plurality of finger actuators mounted to the second side of the arm support;

a plurality of electronics located on the first side of the arm support; and

wherein the plurality of finger actuators includes:

a first plurality of finger actuators assembled within a semi-circular shaped housing and mounted to the second side of the arm support; and

a second plurality of finger actuators arranged in a semi-circular shaped arch and mounted to the second side of the arm support around the first plurality of finger actuators.

2. The lower arm assembly of claim **1**, wherein the first side of the arm support includes a support rib and wherein one of the plurality of wrist actuators are mounted on each side of the support rib.

3. The lower arm assembly of claim **2**, the plurality of electronics include a ring board, a plurality of motor drivers, a lower arm controller, and a plurality of power regulators.

4. The lower arm assembly of claim **3**, wherein one of the plurality of power regulators are mounted on each side of the support rib between the support rib and the respective wrist actuator.

5. The lower arm assembly of claim **3**, further including, a plurality of motors, wherein each of the plurality of motors are associated with a respective one of the plurality of finger actuators and wrist actuators, and wherein each of the motor drivers is associated with at least three of the plurality of motors.

6. The lower arm assembly of claim **3**, wherein the plurality of finger actuators includes at least sixteen finger actuators.

7. The lower arm assembly of claim **1**, further comprising a hand extending from the lower arm, wherein the hand includes a palm side, and wherein the second side of the arm support is associated with a palm side of the hand.

8. A lower arm assembly for a humanoid robot comprising:

an arm support having a first side and a second side;

a plurality of wrist actuators mounted to the first side of the arm support;

a first plurality of finger actuators mounted to the second side of the arm support;

a second plurality of finger actuators mounted to the second side of the arm support around the first plurality of finger actuators;

a plurality of electronics located on the first side of the arm support; and

wherein the first side of the arm support includes a support rib and wherein one of the plurality of wrist actuators is mounted on each side of the support rib.

9. The lower arm assembly of claim **8**, the plurality of electronics include a ring board, a plurality of motor drivers, a lower arm controller, and a plurality of power regulators.

10. The lower arm assembly of claim **9**, further including, a plurality of motors, wherein each of the plurality of motors are associated with a respective one of the first plurality of finger actuators, the second plurality of finger actuators and the plurality of wrist actuators, and wherein each of the motor drivers is associated with at least three of the plurality of motors.

11. The lower arm for the humanoid robot of claim **10**, wherein the first plurality of finger actuators includes at least six finger actuators and the second plurality of wrist actuators includes at least ten wrist actuators.

12. The lower arm for the humanoid robot of claim **1**, further comprising a hand extending from the lower arm, wherein the hand includes a palm side, and wherein the second side of the arm support is associated with a palm side of the hand.

13. A lower arm assembly for a humanoid robot comprising:

an arm support having a first side and a second side;

a plurality of wrist actuators mounted to a first side of the arm support;

a plurality of finger actuators mounted to a second side of the arm support;

a support rib located on the first side of the arm support, wherein one of the plurality of wrist actuators are mounted on each side of the support rib; and

a plurality of electronics located on the first side of the arm support.

14. The lower arm assembly of claim **13**, wherein the plurality of finger actuators includes:

a first plurality of finger actuators assembled within a semicircular shaped housing and mounted to the second side of the arm support; and

a second plurality of finger actuators arranged in a semicircular shaped arch and mounted to the second side of the arm support around the first plurality of finger actuators.

15. The lower arm assembly of claim **13**, the plurality of electronics includes a ring board, a plurality of motor drivers, a lower arm controller, and a plurality of power regulators.

16. The lower arm assembly of claim **15**, wherein one of the plurality of power regulators is mounted on each side of the support rib between the support rib and the respective wrist actuator.

17. The lower arm assembly of claim **15**, further including a plurality of motors, wherein each of the plurality of motors are associated with a respective one of the plurality of finger actuators and wrist actuators, and wherein each of the motor drivers is associated with at least three of the plurality of motors.

* * * * *